CY4532 EZ-PD CCG3PA EVK MAIN BOARD

CONTENTS

PAGE	DESCRIPTION
01	TITLE PAGE
02	BLOCK DIAGRAM
03	CCG3PA CONNECTION
04	PROVIDER & CONSUMER PATH
05	REVISION HISTORY

Drawing Numbers	
PCBA	121-60405-01
PCB	600-60412-01
FAB DRW	610-60361-01
ASSY DRW	620-60369-01
SCH DRW	630-60383-01
PCB LBL	899-60120-01

CYPRESS SEMICONDUCTOR
198 CHAMPION COURT
SAN JOSE, CA 95134
(408) 943-2600

CYPRESS SEMICONDUCTOR © 2017

SCH Title : CY4532 EZ-PD CCG3PA EVK MAIN BOARD

Page Title :TITLE PAGE

Size	Document Number	Drawn By	Approved By	Rev
A4	630-60383-01	PRVE	HITS	06

Date: Tuesday, November 28, 2017 Sheet 1 of 5

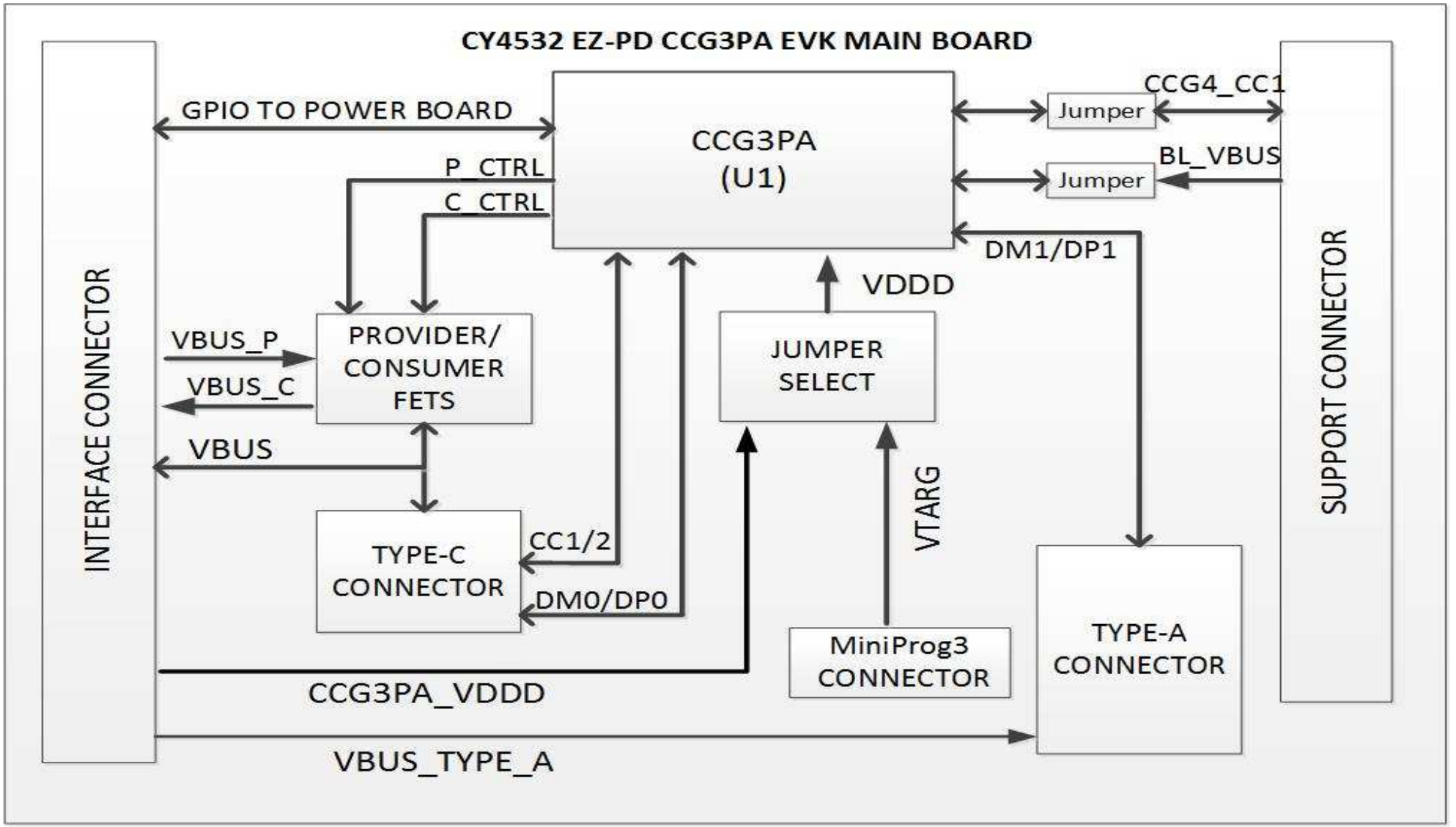

CYPRESS SEMICONDUCTOR
198 CHAMPION COURT
SAN JOSE, CA 95134
(408) 943-2600

CYPRESS SEMICONDUCTOR © 2017

SCH Title : CY4532 EZ-PD CCG3PA EVK MAIN BOARD

Page Title :BLOCK DIAGRAM

Size	Document Number	Drawn By	Approved By	Rev
A4	630-60383-01	PRVE	HITS	06

Date: Tuesday, November 28, 2017 Sheet 2 of 5

CCG3PA CONNECTIONS

	J2,J3 & J4	J6	J5 & J7
PA	1-2	1-2	NC
PB	2-3	1-2	NC
PRG	PA/PB	1-2	1-2
MP3	NC	2-3	NC

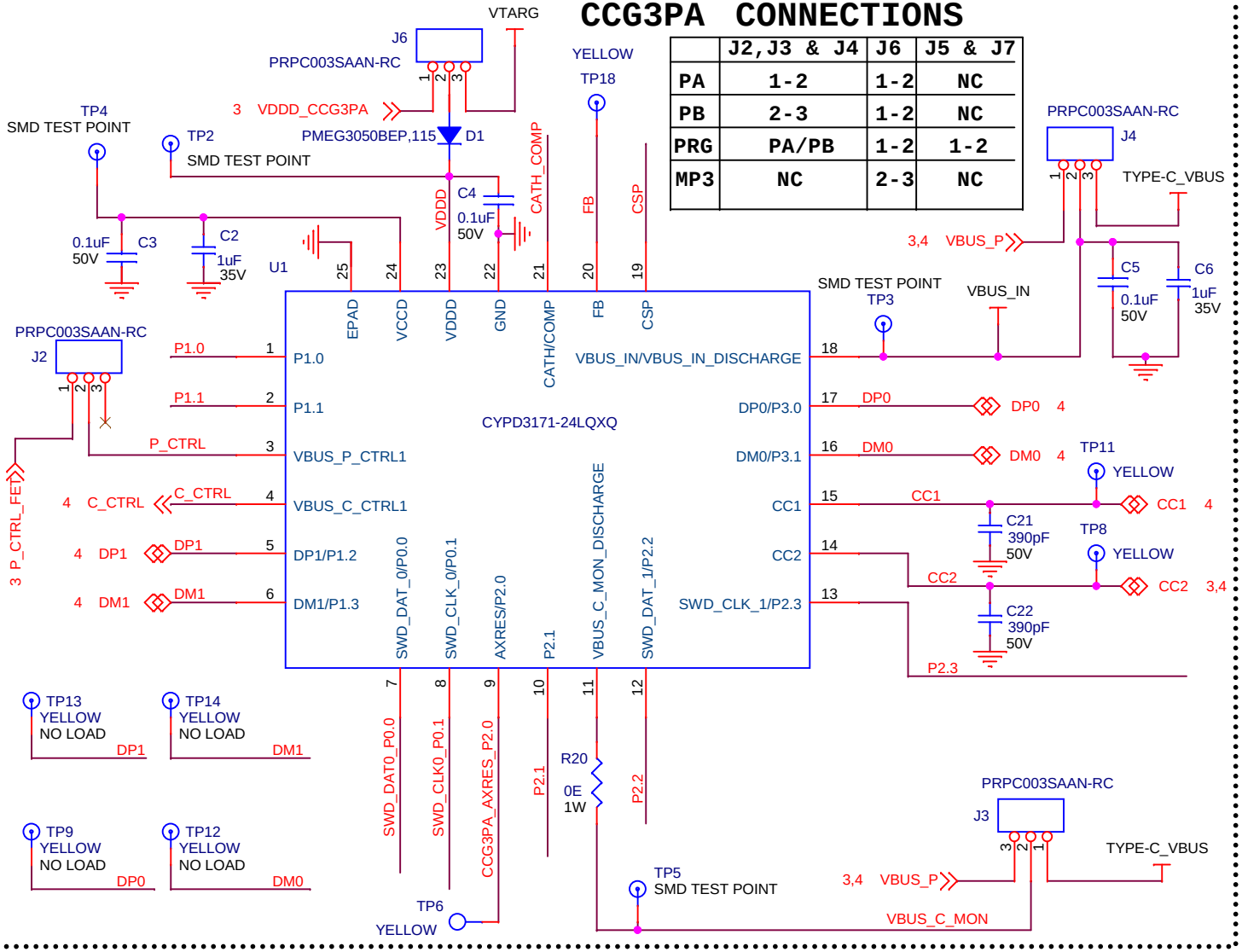

SUPPORT CONNECTOR

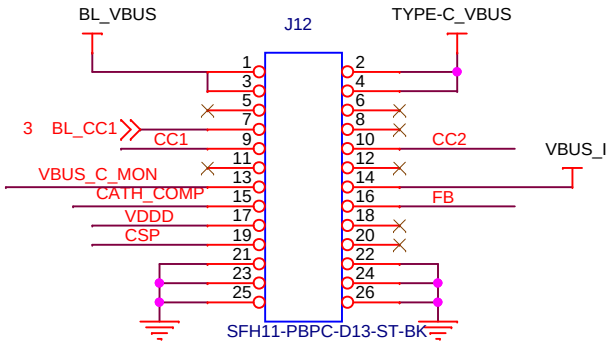

BOOT LOADING OPTION

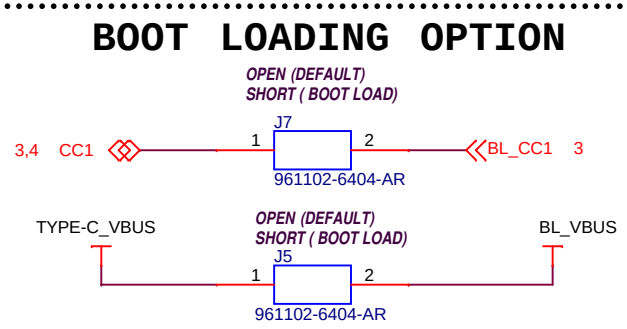

INTERFACE CONNECTOR

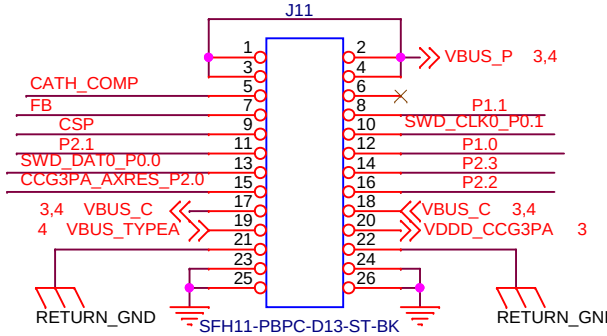

MINIPROG CONNECTOR

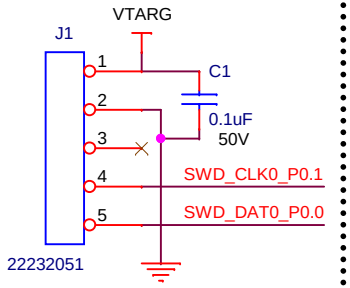

FB & CATH COMP CIRCUIT

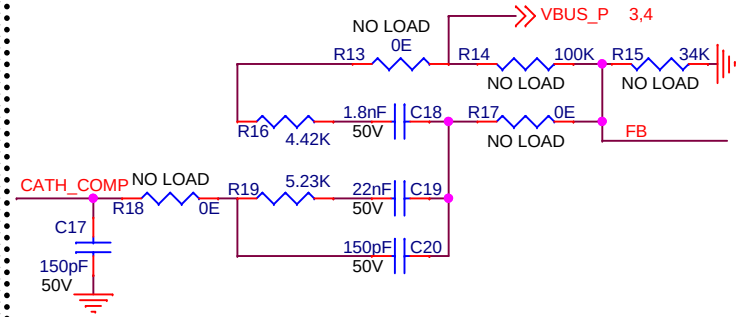

DEBUG CONNECTOR

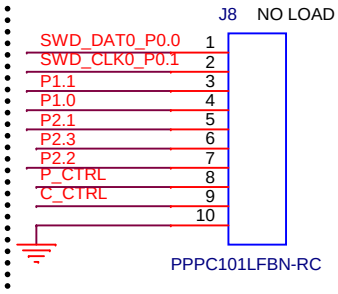

CYPRESS SEMICONDUCTOR
198 CHAMPION COURT
SAN JOSE, CA 95134
(408) 943-2600

CYPRESS SEMICONDUCTOR © 2017

SCH Title : CY4532 EZ-PD CCG3PA EVK MAIN BOARD

Page Title :CCG3PA CONNECTION

Size	Document Number	Drawn By	Approved By	Rev
A4	630-60383-01	PRVE	HITS	06

Date: Tuesday, November 28, 2017 Sheet 3 of 5

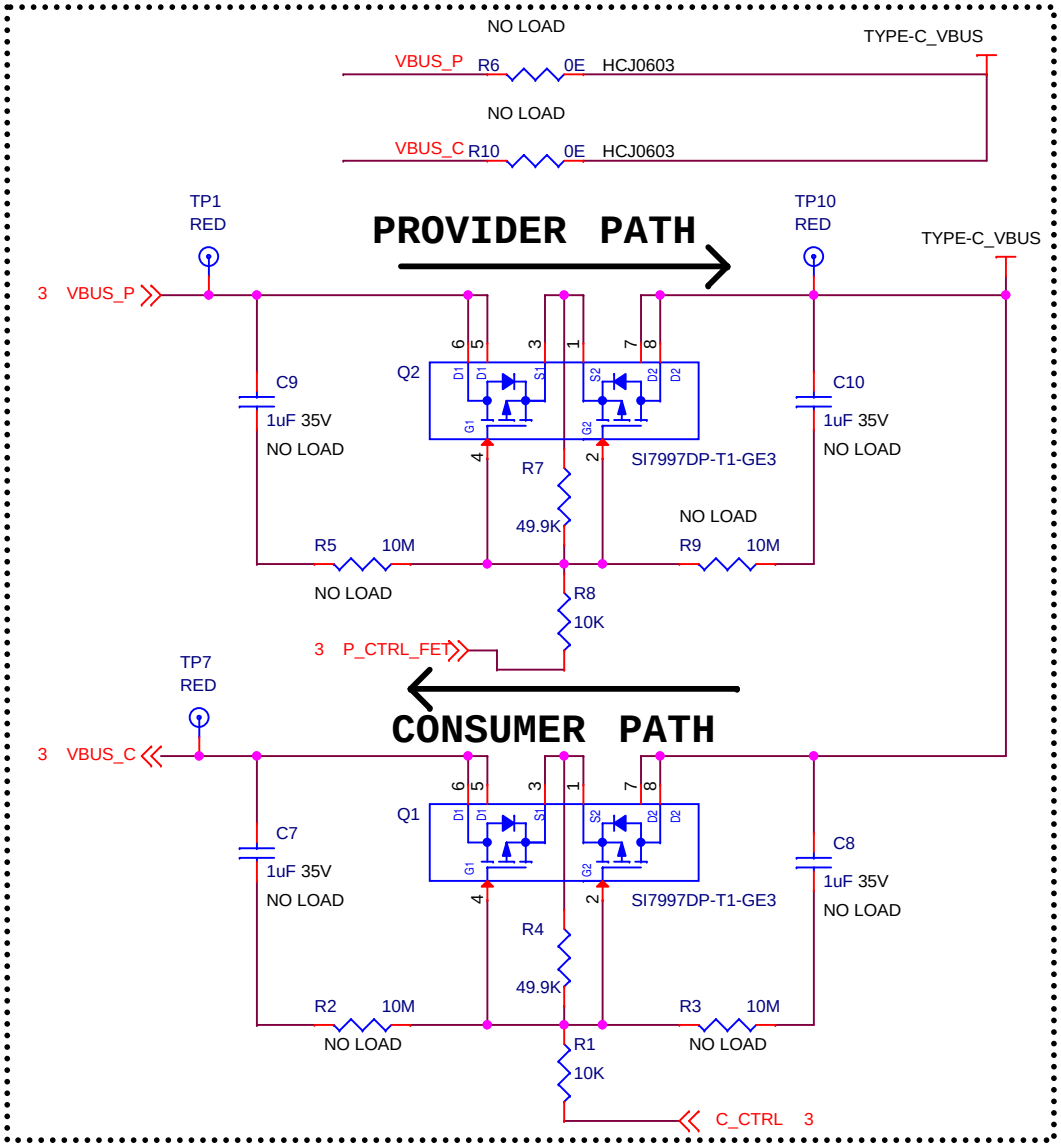

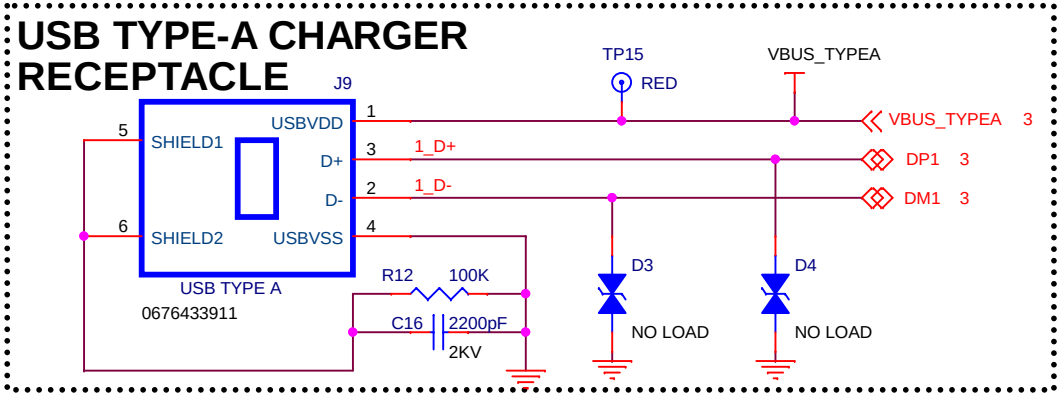

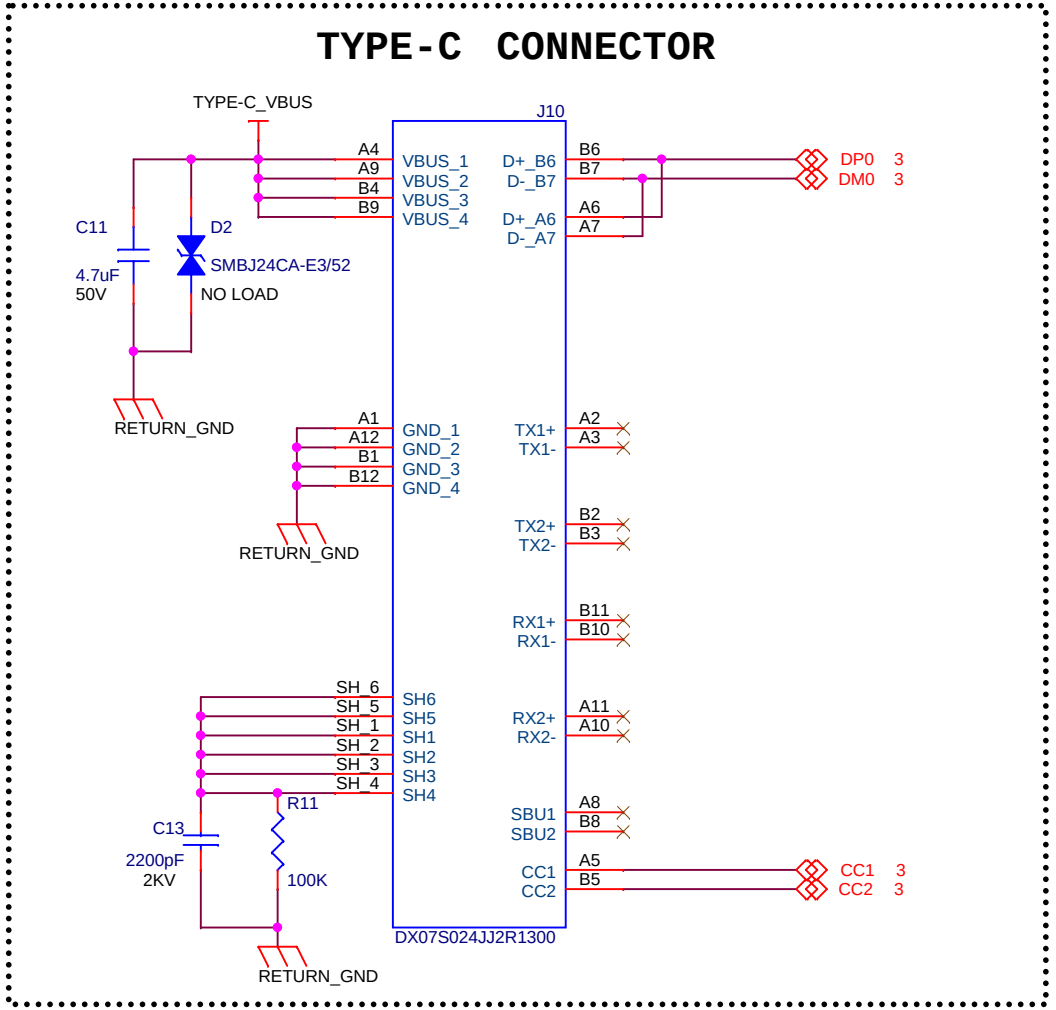

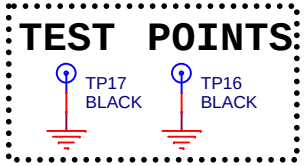

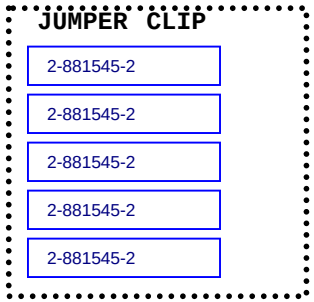

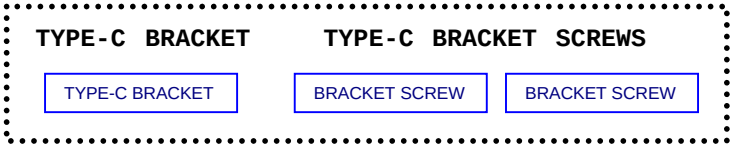

CYPRESS SEMICONDUCTOR
198 CHAMPION COURT
SAN JOSE, CA 95134
(408) 943-2600

CYPRESS SEMICONDUCTOR © 2017

SCH Title : CY4532 EZ-PD CCG3PA EVK MAIN BOARD

Page Title :PROVIDER & CONSUMER PATH

Size	Document Number	Drawn By	Approved By	Rev
A4	630-60383-01	PRVE	HITS	06

Date: Tuesday, November 28, 2017 Sheet 4 of 5

Change List

REV04	Swapped DP0 & DM0 pins Added Jumper on P-Ctrl. Added 0 ohm Resistor R20 on VBUS_C_MON. Changed J5 connection for Type-C_VBUS.
REV06	Vbus Cap C11 make 4.7uF Changed table on sheet 3

REVISION HISTORY

REV	DESCRIPTION OF CHANGE	DATE
01	INITIAL RELEASE	2017/04/07
02	ALPHA RELEASE	2017/05/02
03	BETA RELEASE	2017/05/20
04	BETA RELEASE	2017/05/26
05	BETA RELEASE	2017/06/16
06	PRODUCTION RELEASE	2017/11/28

CYPRESS SEMICONDUCTOR
198 CHAMPION COURT
SAN JOSE, CA 95134
(408) 943-2600

CYPRESS SEMICONDUCTOR © 2017

SCH Title : CY4532 EZ-PD CCG3PA EVK MAIN BOARD

Page Title :REVISION HISTORY

Size	Document Number	Drawn By	Approved By	Rev
A4	630-60383-01	PRVE	HITS	06

Date: Tuesday, November 28, 2017 Sheet 5 of 5